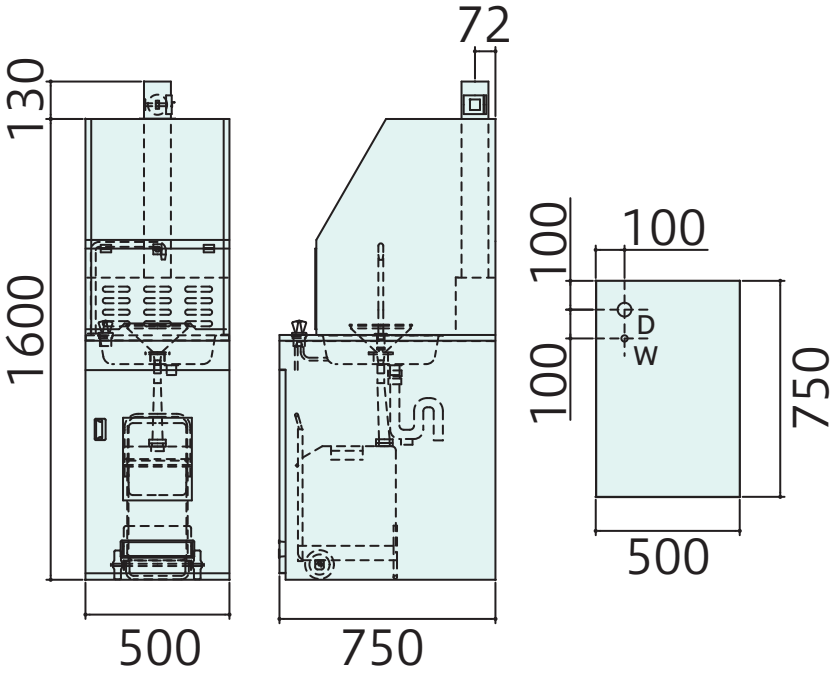
130
1600
500
72
750
100
100
100
D
W
750
500