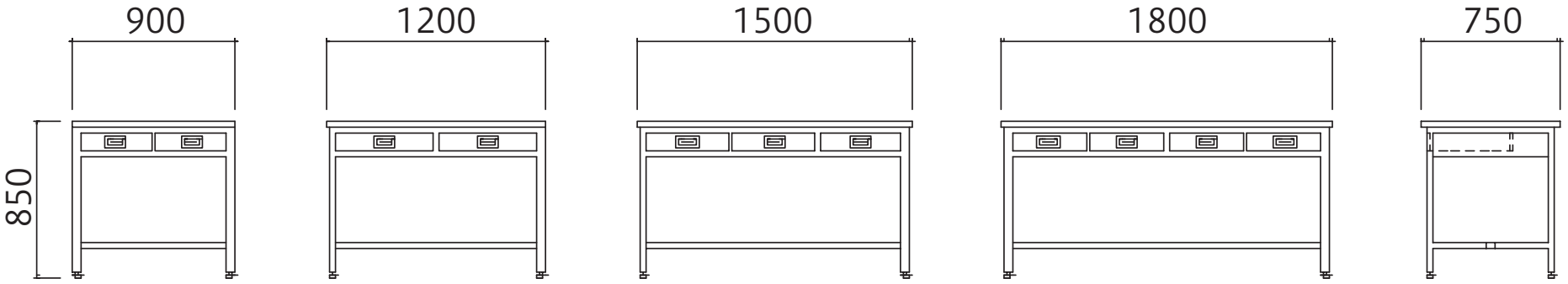
900
1200
1500
1800
750
850